Nucleation and growth of Fe on GaAs(001)-(2×4) studied by scanning tunneling microscopy

P. M. Thibado, E. Kneedler, B. T. Jonker, B. R. Bennett, B. V. Shanabrook, and L. J. Whitman
Naval Research Laboratory, Washington, DC 20375
(Received 12 February 1996)

The nucleation and growth of Fe on GaAs(001)-(2×4) has been studied *in situ* with scanning tunneling microscopy. The growth is dominated by the structure of the substrate reconstruction. Fe initially forms stable six- to eight-atom two-dimensional islands confined to the first-layer As-dimer rows. The islands preferentially coalesce along the rows, leading to an anisotropic film morphology that persists for at least the first 50 Å of growth. These results provide insight into the growth mode of Fe on GaAs surfaces and have implications for the magnetic properties of ultrathin Fe films. [S0163-1829(96)53716-1]

Magnetic metal films on semiconductor substrates form the basis for a class of electronic and electro-optical heterostructure devices.[1] In these devices the magnetic anisotropy and/or carrier spin allows one to modulate the electrical or optical properties in interesting ways. For heterostructures composed of very thin metal films, the atomic-scale structure of the metal-semiconductor interface may affect both the magnetic properties of the film and the electronic transport through the structure, and thereby play a critical role in determining final device performance. Such effects are expected to be particularly pronounced for growth on compound semiconductor substrates, which exhibit a plethora of surface reconstructions. The different stoichiometries and symmetries of the reconstructions are expected to influence adatom nucleation, interface formation, and film growth, leading to different magnetic and transport properties.[2]

Fe on GaAs is a particularly promising system for use in magnetoelectronics.[1,3] Fe is known to grow epitaxially on the (110) and (001) surfaces of GaAs, due in part to the lattice constant of bcc Fe (2.866 Å) being about half that of GaAs (5.654 Å).[4–6] Fe is typically grown at ~175 °C, a temperature found to produce good magnetic properties along with a relatively abrupt Fe-GaAs interface. On GaAs(110), which has a simple (1×1) surface reconstruction, Fe grows in a Volmer-Weber mode at both ~175 °C and room temperature, nucleating three-dimensional (3D) clusters even at submonolayer coverages.[7–9] Studies of Fe growth on the (001) surface of GaAs are complicated by the large number of surface reconstructions (either Ga or As rich). In a detailed study of Fe growth at 175 °C on Ga-rich GaAs(001)-*c*(8×2) (prepared by sputtering and annealing), Chambers *et al.* reported 3D growth accompanied by out diffusion of both Ga and As from the interface into the Fe film.[10] Volmer-Weber growth was also reported at 175 °C on Ga-rich GaAs(001)-(4×6) (prepared by desorbing the surface oxide).[11] Little work has been done with the As-rich reconstructions, due to the difficulty of preparing well-ordered surfaces. Recently, Takeshita *et al.* used scanning tunneling microscopy (STM) to study the room-temperature growth of the first monolayer (ML) of Fe on As-rich GaAs(001)-*c*(4×4) grown by molecular beam epitaxy (MBE).[12] The film was found to grow as clusters whose size appeared correlated with the underlying *c*(4×4) reconstruction. To our knowledge, no work to date has addressed Fe growth on the As-rich (2×4)-reconstructed surface, which is the substrate typically used for electronic device fabrication. We report here the results of an *in situ* STM study of Fe growth on MBE-prepared GaAs(001)-(2×4). We find the nucleation and growth to be dominated by the structure of the substrate reconstruction.

Our experiments were carried out in an interconnected, multiple chamber ultrahigh vacuum MBE and surface analysis facility. Surfaces with a (2×4) reconstruction were prepared by MBE on Si-doped GaAs substrates oriented to within 0.1° of (001), and then dosed with Fe in a second MBE chamber while at 175 °C. A fresh GaAs substrate was prepared for each Fe coverage studied. We define 1 ML of Fe as 1.21×10^{15} atoms/cm^2 [corresponding to the density of the bcc Fe(001) surface], which would produce a film 1.4 Å thick if deposited uniformly on Fe(001). The Fe coverages were calibrated based on *ex situ* x-ray fluorescence measurements. (Additional details regarding the surface preparation can be found elsewhere.[13]) STM images were acquired at room temperature with a constant current of 0.1 nA and sample biases ranging from −1.8 to −3.0 V. Average Fe island sizes were determined for coverages ⩾0.5 ML by finding the directionally dependent Gaussian width of the 2D height-height autocorrelation function for a number of images and image sizes.

As illustrated in Fig. 1(a), the GaAs(001)-(2×4) unit cell is composed of two adjacent As dimers with dimer bonds along [$\bar{1}$10], and two adjacent Ga dimers with dimer bonds along [110].[14,15] A typical large-scale STM image of a clean GaAs(001)-(2×4) surface is shown in Fig. 1(b). The surface consists of large, atomically smooth terraces (~0.5 μm wide) separated by 2.8-Å-high steps, with very few islands or pits. Higher-resolution images of the surface (inset) reveal a well-ordered, low-defect-density (2×4) reconstruction. The bright rows oriented along [$\bar{1}$10], spaced 16 Å apart, correspond to the rows of As dimer pairs. The distinct oblong bumps spaced 8.0 Å apart along the rows arise from the individual dimer pairs. (The two dimers within each pair are not resolved.)

The topography of the surface following Fe deposition is shown in Fig. 2. Upon deposition of 0.1 ML [Fig. 2(a)], small bumps appear (seen as bright spots in the image) almost exclusively on top of the As dimer rows. The bumps are typically ~8 Å in diameter and ~1 Å high (with respect to the As dimers); as will be shown below, they are associ-

 © 1996 The American Physical Society

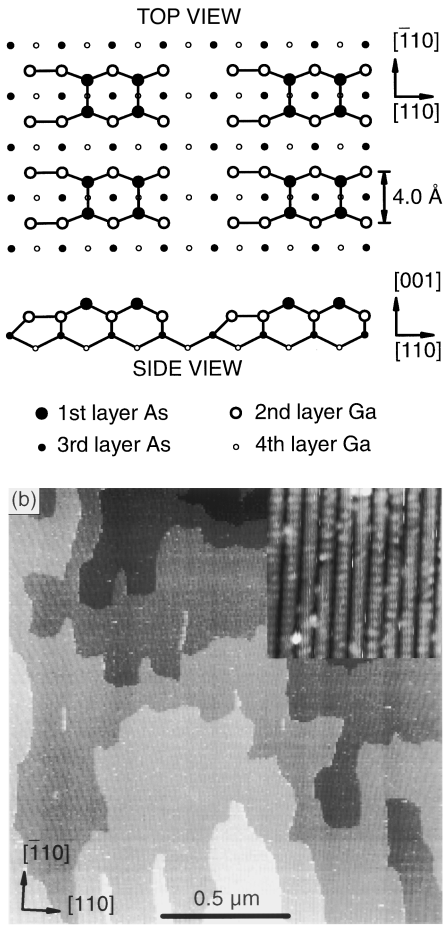

FIG. 1. (a) Structural model of the GaAs(001)-(2×4) surface (Ref. 14). (b) Filled-state, gray-scale STM image of a clean GaAs(001)-(2×4) surface grown by MBE; 1.7×1.7 μm^2. Each gray level indicates a change in height of 2.8 Å (corresponding to a monolayer step). Inset: Higher-magnification filled-state image resolving the (2×4) surface reconstruction; 160×160 $Å^2$.

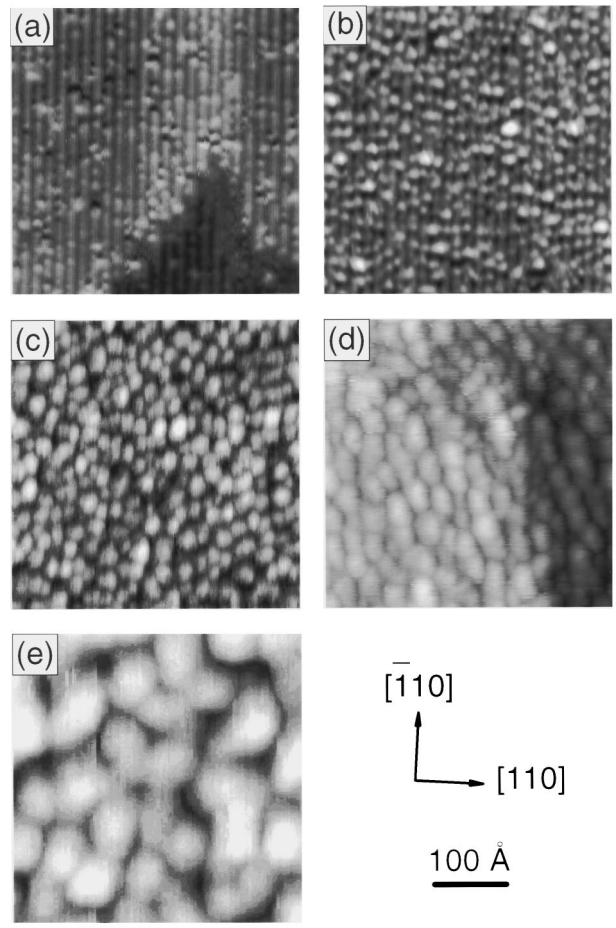

FIG. 2. Filled-state STM images of GaAs(001)-(2×4) following Fe deposition at 175 °C; 400×400 $Å^2$. The total Fe coverage is (a) 0.1, (b) 0.25, (c) 0.5, (d) 1, and (e) 35 ML. The gray-scale height ranges are approximately: (a) 5, (b) 3, (c) 3, (d) 6, and (e) 3 Å. Note that two substrate terraces are present in (a) and (d). The Fe film initially grows as 2D islands confined to the As-dimer rows.

ated with small 2D Fe islands. Upon doubling the coverage to 0.2 ML [Fig. 2(b)], the number of Fe islands approximately doubles (most remain the same size), with most islands still confined to the As rows. The rowlike structure associated with the original (2×4) surface reconstruction is still evident, indicating that the substrate is not significantly disrupted by Fe adsorption. Upon deposition of a total of 0.5 ML of Fe [Fig. 2(c)], the islands coarsen preferentially along the [110] direction, but maintain a 2D character. At this coverage the average island is 15 Å wide and 25 Å long (from the 2D autocorrelation function). Note that any Fe island greater than 12 Å wide must cover a recessed Ga-dimer row (between the As rows); therefore, the flat appearance of the islands implies that some edges of the larger islands must be two Fe layers thick. The island coarsening and shape anisotropy increase further as the Fe coverage grows to 1 ML, as shown in Fig. 2(d). The average island width × length increases to 35×90 $Å^2$. In addition, some of the islands now appear to have an additional Fe layer on top.

The thickest Fe coverage studied was 35 ML (50 Å) [Fig. 2(e)]. At this coverage, large rectangular islands exist with two distinct heights above the topographic minimum (separated by ~1.4 Å, corresponding to an Fe monolayer step), indicating the presence of three Fe layers at the growth front. Surprisingly, the island shape anisotropy persists even at this relatively thick coverage, with an average island approximately 50×80 $Å^2$ (elongated along [$\bar{1}$10]). The 2D growth mode, bcc structure, and composition of our Fe films on GaAs(001)-(2×4) as determined by photoelectron diffraction and core-level photoemission are described in detail elsewhere.[13]

Clean and Fe-covered surfaces were also examined as a function of filled-state tunneling bias voltage in order to elucidate the identity of the topographic features induced by Fe adsorption. As shown in Figs. 3(a) and 3(b), defects typically observed on an Fe-free surface have very little bias dependence. In contrast, the bumps that appear on the As dimer rows following Fe adsorption [Figs. 3(c) and 3(d)] become much more prominent at lower voltage relative to the rest of the topography. This effect is characteristic of metal atom clusters on GaAs, which typically create new states in the III-V band gap:[16] tunneling out of these states will dominate at lower bias voltages. Although we cannot definitively establish that there is no As or Ga in the Fe clusters, we would expect the Fe-induced features to have much greater variability in size and appearance if significant intermixing occurred.

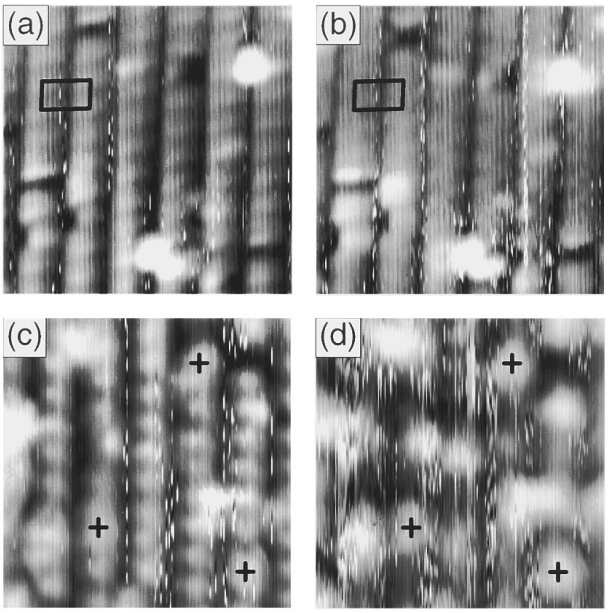

FIG. 3. Filled-state images highlighting the distinct bias dependence of Fe islands on GaAs(001)-(2×4) as compared to typical surface defects; 100×100 Å^2. Clean surface at (a) 3.0 V and (b) 1.8 V. The same (2×4) unit cell is indicated in both images. Fe-covered surface (0.1 ML) at (c) 3.0 V and (d) 1.8 V. A few Fe islands are marked by cross hairs.

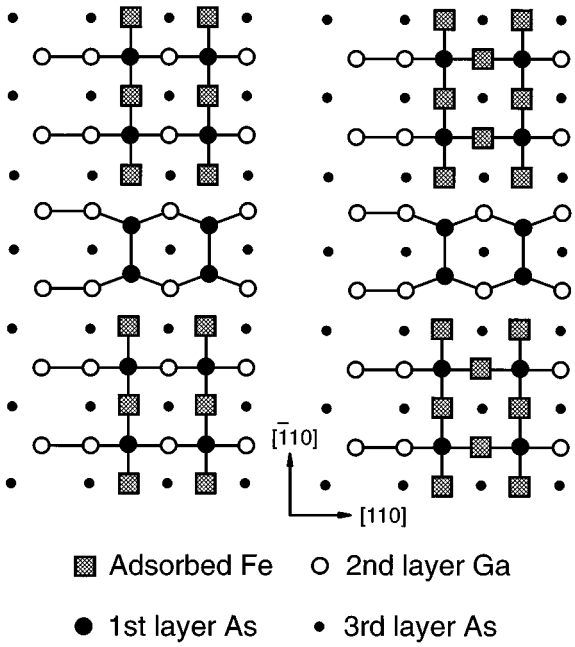

FIG. 4. Top view of proposed structural models for stable Fe islands observed for ≤0.25 ML. The adsorbed Fe atoms are assumed to be in a plane above the first-layer As atoms. Left: Six-atom islands with a local Fe_3As_2 stoichiometry. Right: Eight-atom islands with a local Fe_2As stoichiometry. Both of these structures may coexist on the surface. The islands are always separated along the [110] direction by at least one pair of As dimers.

The compositional abruptness of the initial interfaces (<2 ML) is also supported by core-level photoemission results.[13] These results, combined with the observation that the bumps are approximately flat, regularly-sized, and double in number upon doubling the Fe coverage, lead us to conclude that each of these features is associated with a 2D island of Fe atoms adsorbed on the first-layer As rows.

Counting the islands in a number of STM images reveals that for coverages up to ~0.2 ML the average 2D island consists of 7±1 Fe atoms. Furthermore, these islands always have at least one Fe-free As dimer pair between them along the rows. This can be seen most clearly at 0.2 ML [Fig. 2(b)], where the Fe islands appear nearly periodic along each As dimer row (the islands are only weakly correlated across the rows). Based on this analysis, we propose a structural model for the initial growth of Fe on GaAs(001)-(2×4), shown in Fig. 4, consisting of six- to eight-atom islands that are bonded atop the first-layer As rows and separated along each row by a single pair of As dimers. The six- and eight-atom islands have a local Fe_3As_2 and Fe_2As stoichiometry, respectively, with Fe occupying all the bcc(001) sites in the denser island. In the bulk these two compounds have very similar stability (as reflected by their melting temperatures), and are the most stable Fe_xAs_y compounds with the exception of FeAs, which is marginally more stable.[17,18] Given that the Fe_xAs_y stability increases with Fe oxidation state independent of crystal structure,[17,18] we believe that the stability of the Fe+As surface structures can be related to their local stoichiometries. For example, we suspect both island stoichiometries coexist on the surface [along with intermediate seven-atom islands, each with only one atom in a fourfold bcc (001) site] because the two related compounds have similar stability.

Based on the relative stability of Fe_xAs_y compounds, one might expect long Fe islands to form atop the As rows. The observation that the Fe islands rarely coalesce along the rows during the initial growth, despite the apparent mobility of Fe adatoms, indicates the six- to eight-atom islands must be metastable structures. This stability could be an inherent structural property, such that adding another Fe atom increases the total energy per atom within the island. Alternately, there could be a diffusion barrier surrounding each island that prevents additional atoms from reaching it, as might occur, for example, if each island were locally charged. Additional experimental and/or theoretical work is required to clarify the origins of the preferred island size.

The relative stability of the binary alloys pertinent to Fe on GaAs, Fe_mGa_n<Fe_xAs_y<GaAs,[17,18] suggests a way to understand the reconstruction dependence of the growth. Thermodynamically, Fe would prefer to bond with As rather than Ga, causing the initial nucleation to occur on the surface (first-layer) As rows. Due to the effects discussed above, the initial Fe_xAs_y-like islands have a preferred length of 8 Å and a minimum island-island distance of 16 Å, leading to local (4×4)-like arrangements of islands at ~0.2 ML [see Fig. 2(b)]. Beyond this coverage, 2D growth occurs between the rows as well as along the rows (on the remaining As dimers), leading to island coalescence. The coalescence is enhanced along the [110] direction, possibly due to a thermodynamic preference for adsorption on the remaining As sites and/or kinetic anisotropies (e.g., faster diffusion along versus across the As rows). The influence of the (2×4) substrate reconstruction on the surface topography is still evident on films as thick as 35 ML (50 Å), although by this coverage the

homoepitaxial nature of the growth begins to erase the island shape anisotropy.

The observation that Fe islands do not nucleate on surface Ga sites (preferring As sites), possibly for the simple thermodynamic stability reason just discussed, suggests an explanation for the growth mode of Fe on other GaAs surfaces. On GaAs(110), with a surface consisting of alternating Ga and As sites, the Fe film minimizes its contact with Ga by nucleating as 3D clusters.[7–9] At extremely low coverages the Fe clusters become bulklike (metallic), making them strongly favored adsorption sites for continued growth. We propose that for the same reason, Fe also grows as 3D clusters on the Ga-rich GaAs(001)-$c(8\times2)$ and $-(4\times6)$ surfaces.[10,11] Conversely, our preliminary study of Fe on GaAs(001)-$c(4\times4)$, a completely As-terminated surface, indicates that at 175 °C Fe initially nucleates as 2D islands, as expected for this model.

In conclusion, we have used STM to study the growth of Fe on GaAs(001)-(2×4), the As-rich surface typically used for device fabrication. We find the growth to be dominated by the structure of the substrate reconstruction. Fe initially grows exclusively on the first-layer As dimer rows, forming six- to eight-atom 2D islands. With increasing coverage, these islands eventually coalesce to cover the surface with larger islands that are elongated along the [110] (As-dimer row) direction; this shape anisotropy persists for at least the first 50 Å of film growth. We propose that the preferential bonding of Fe to As rather than Ga may be a general phenomenon that accounts for the different Fe growth modes observed on various GaAs surfaces. Different growth modes should lead to distinct Fe film morphologies and, therefore, distinct magnetic properties, demonstrating the importance of substrate orientation and preparation in the fabrication of ultrathin film magnetoelectronic devices.

The authors thank Dr. R. J. Wagner for technical discussions. This work supported by the Office of Naval Research.

[1] Phys. Today **48** (4), 24–63 (1995), special issue on magnetoelectronics, edited by Gary Prinz and Kristl Hathaway.
[2] B. T. Jonker, SPIE **2140**, 118 (1994).
[3] S. Datta and B. Das, Appl. Phys. Lett. **56**, 665 (1990).
[4] G. A. Prinz and J. J. Krebs, Appl. Phys. Lett. **39**, 397 (1981).
[5] J. R. Waldrop and R. W. Grant, Appl. Phys. Lett. **34**, 630 (1979).
[6] J. J. Krebs, B. T. Jonker, and G. A. Prinz, J. Appl. Phys. **61**, 2596 (1987).
[7] R. A. Dragoset, P. N. First, J. A. Stroscio, D. T. Pierce, and R. J. Celotta, in *Growth, Characterization and Properties of Ultrathin Magnetic Films and Multilayers*, edited by B. T. Jonker, J. P. Heremans, and E. E. Marinero, MRS Symposia Proceedings No. 151 (Materials Research Society, Pittsburgh, 1989), p. 193.
[8] P. N. First, J. A. Stroscio, R. A. Dragoset, D. T. Pierce, and R. J. Celotta, Phys. Rev. Lett. **63**, 1416 (1989).
[9] M. W. Ruckman, J. J. Joyce, and J. H. Weaver, Phys. Rev. B **33**, 7029 (1986).
[10] S. A. Chambers, F. Xu, H. W. Chen, I. M. Vitomirov, S. B. Anderson, and J. H. Weaver, Phys. Rev. B **34**, 6605 (1986).
[11] B. T. Jonker, G. A. Prinz, and Y. U. Idzerda, J. Vac. Sci. Technol. B **9**, 2437 (1991).
[12] H. Takeshita, H. Akinaga, M. Ehinger, Y. Suzuki, K. Ando, and K. Tanaka, Jpn. J. Appl. Phys. **34**, 1119 (1995).
[13] E. Kneedler, P. M. Thibado, B. T. Jonker, B. R. Bennett, B. V. Shanabrook, and L. J. Whitman, J. Vac. Sci. Technol. A (to be published).
[14] J. Zhou, Q. Xue, H. Chaya, T. Hashizume, and T. Sakurai, Appl. Phys. Lett. **64**, 583 (1994).
[15] Recently there has been a debate about whether GaAs(001)-(2×4) has two or three As dimers adjacent to each other; although our study does not directly address this controversy, our results are generally consistent with the two-dimer model.
[16] R. M. Feenstra, Appl. Surf. Sci. **56-58**, 104 (1992).
[17] X. X. Hansen, *Constitution of Binary Alloys* (McGraw-Hill, New York, 1950).
[18] O. Kubaschewski, *Iron–Binary Phase Diagrams* (Springer-Verlag, New York, 1982).